Doctor of technical Sciences, Professor Kravchenko Andrey Mikhailovich
correspondent member of the Russian Academy of natural Sciences,
the Honored worker of a science and education
Professor of the Department of General professional courses of the Ryazan
higher airborne command school named army-General Margelov V.F.

A METHOD OF CREATING AN ELECTRONIC 3D MODELS OF PRODUCTS

When learning and development (design, engineering) engineering products (and other objects of the material world) currently can not do without three-dimensional visualization of a design object. It allows you to:

- optimally accept the results of technical creativity;
- effectively to demonstrate and interpret;
- use of the results for further improvement of product design;
- when you need to do a traditional (paper) drawings in semi-automatic mode in the CAD environment.

The most affordable, but not an effective method of creating 3D models of the finished parts is the traditional "manual" method: "dimensioning" details with simple measuring tools, making a sketch taken on the size and execution thereon in the CAD environment of its digital copies.

Many institutions in its research and educational activities using 3D scanning of parts with the formation of the 3D file and transfer it to CAD for further editing.

For geometrically simple objects, for training purposes we have mastered the "intermediate" method of creating digital 3D models, which is as follows.

1. Performed digital photography of three major types (front, left, top) of the part (figure 1). It is important to use a camera with high resolution and also you have to have it stationary on the tripod exactly in the plane parallel to the plane of this type to a minimum of distortion caused by perspective.

2. For each species details on measure linear dimensions with the required accuracy (figure 2).

Fig. 1

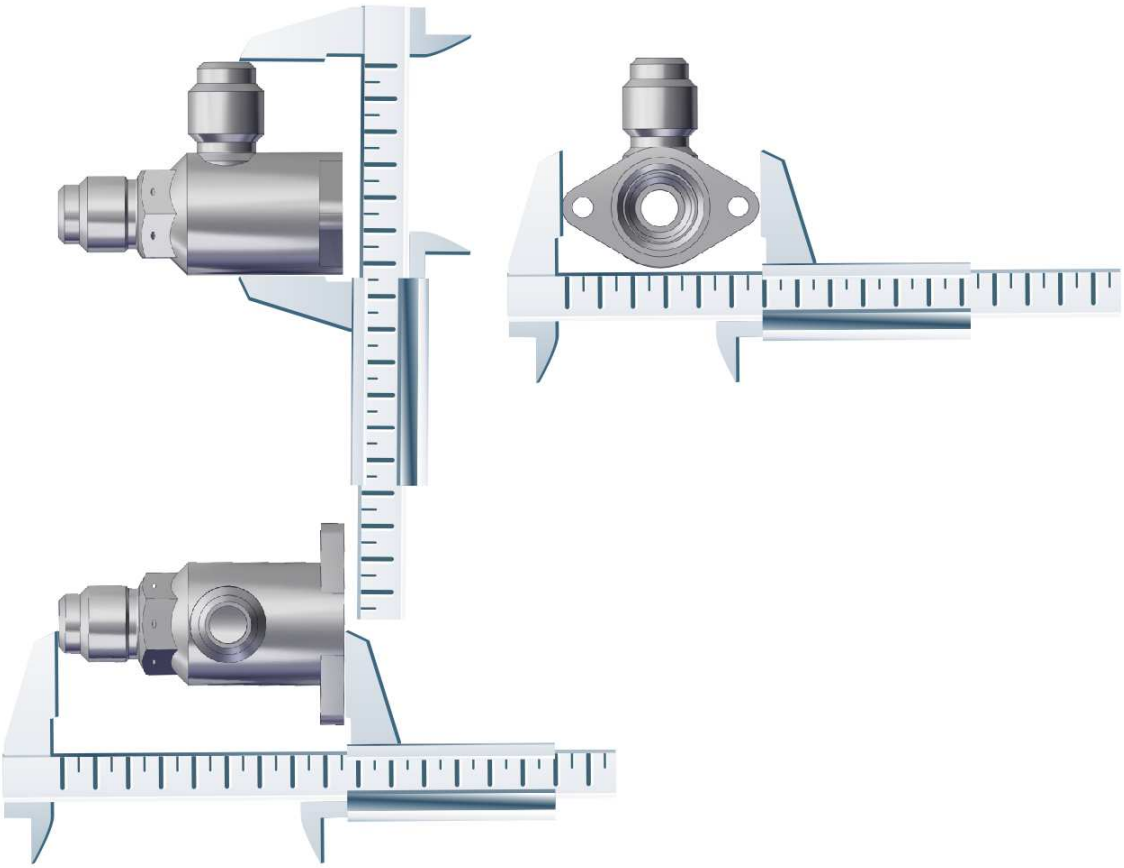

Fig. 2

A bitmap image of each part is integrated (figure 3) in environment engineering CAD systems (AutoCAD, COMPASS, etc.).

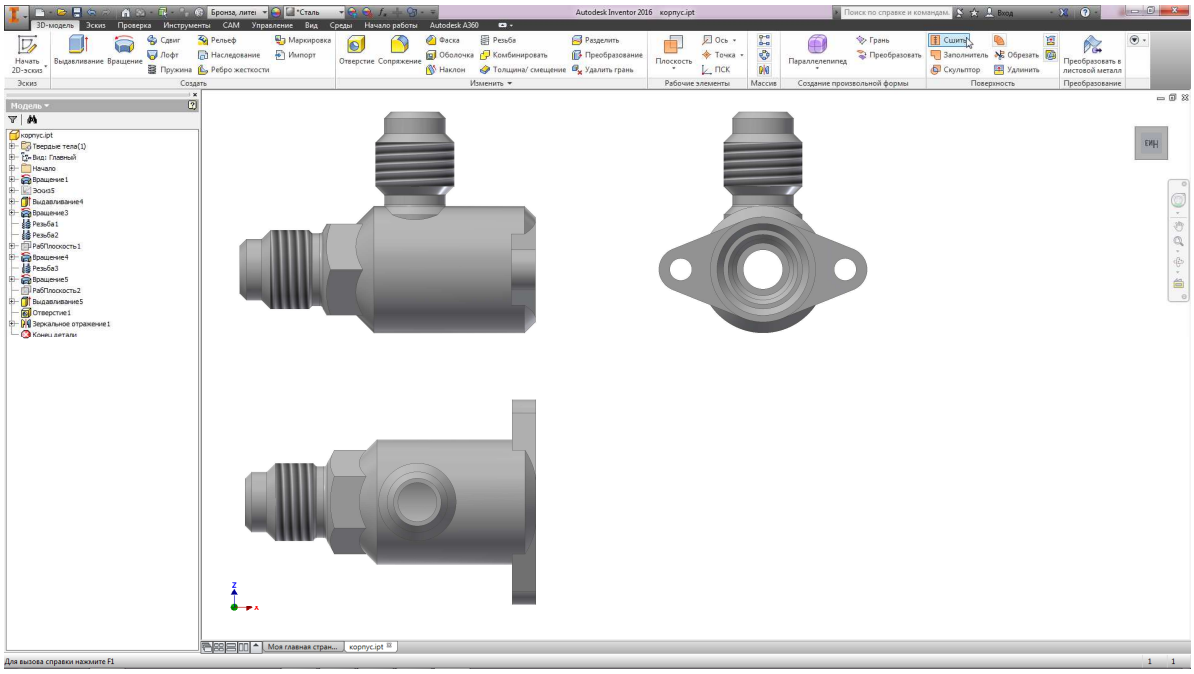

Fig. 3

4. Next, these images are scaled by a known size (figure 4).

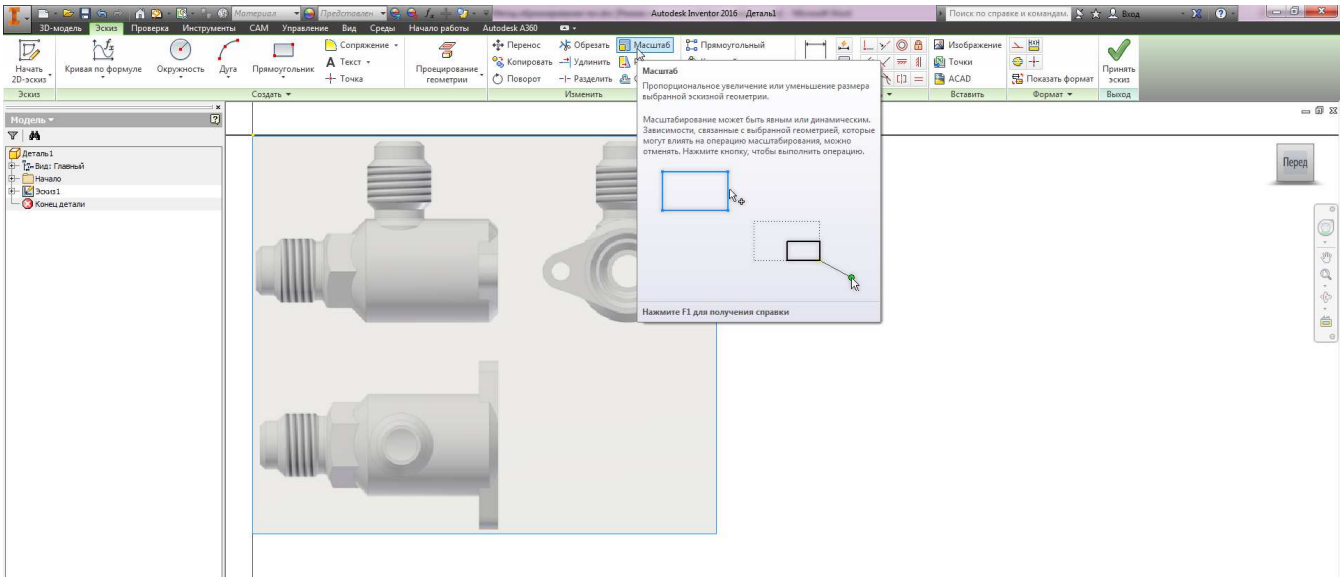

Fig. 4

5. Then over the visible contours of the image of each type by CAD tools perform sketches necessary details (figure 5).

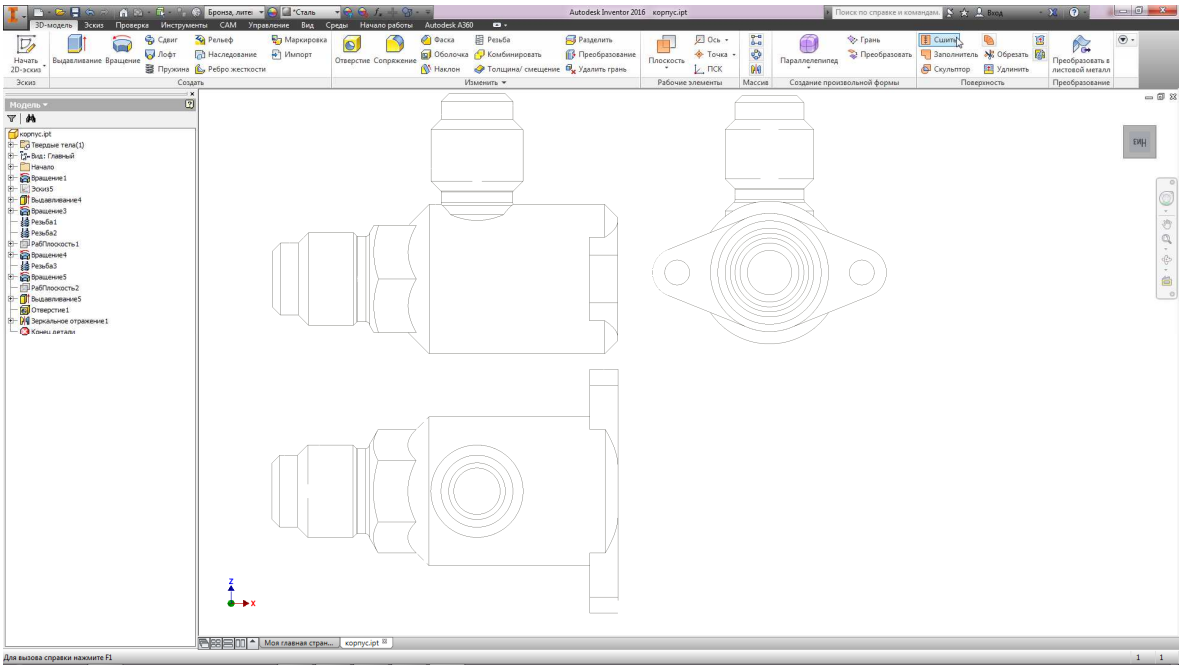

Fig. 5

6. Finally, using sketches staffing tools and commands of CAD actually generated a 3D model of the product (figure 6).

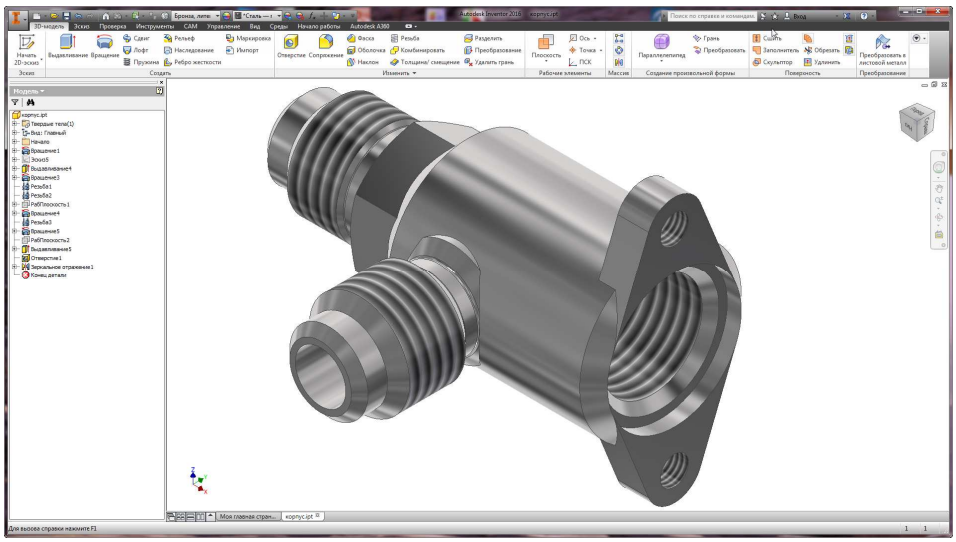

Fig. 6

If you want to create a digital model of an Assembly unit (host unit) perform pre-3D models of other parts included in the Assembly in the same sequence (figure 7), and then combining them in the CAD environment and applying ties form the Assembly (figure 8).

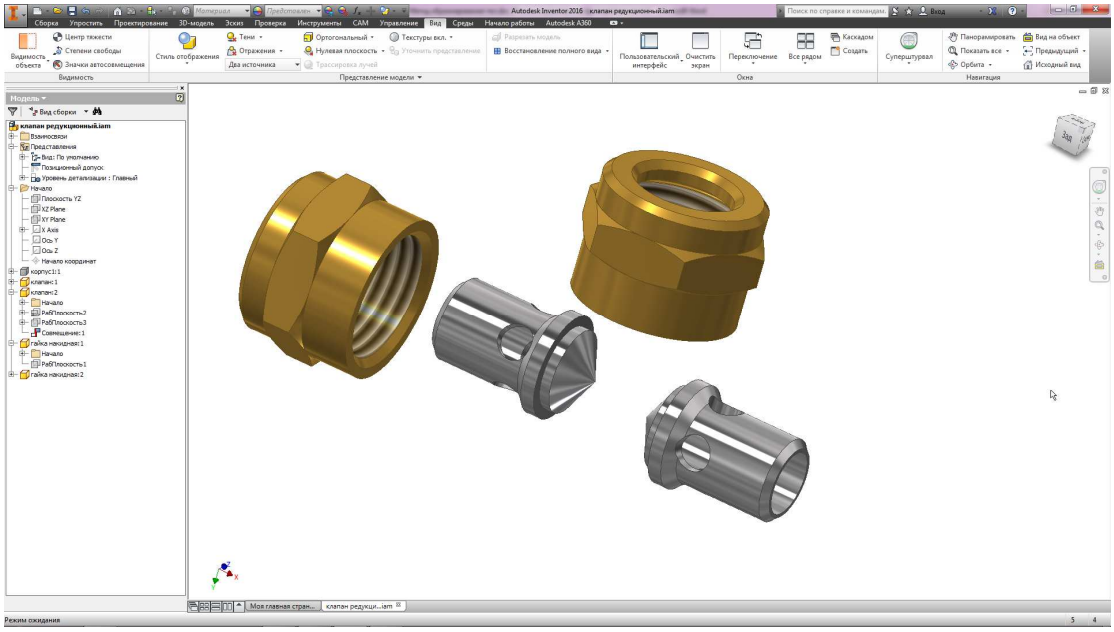

Fig. 7

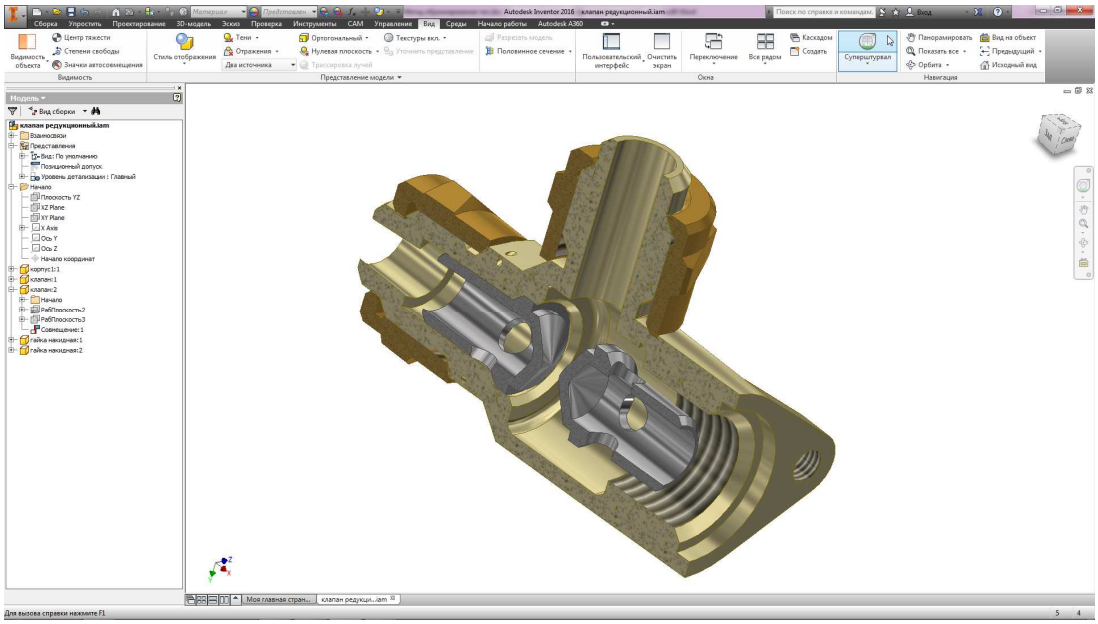

Fig. 8

References:

1. Тремблей Т. Autodesk Inventor 2013 и Inventor LT 2013. Основы. Официальный учебный курс. – М.: ДМК Пресс, 2013.

2. Кравченко А.М., Кравчук Н.В. Информационные технологии в инженерном образовании: монография. – Рязань, РВАИ, 2008;

3. Бышов Н.В., Кравченко А.М., Борычев С.Н. и др. Основы инженерного проектирования: монография. – Рязань, РГАТУ, 2011.