The use SHF-pasteurization for milk

Kaziev M., Orymbetova G.

M.Auezov South Kazakhstan State University
Shymkent, Kazakhstan

Abstract

The efficiency of the developed technology of SHF pasteurization was estimated at the university. Effect of the direct heating of protein in the cells of harmful microorganisms is used in technology by SHF of electromagnetic waves with a frequency of 2450 MHz. Scientific innovation of development consists in it. Low temperature of pasteurization ensures the preservation of valuable biochemical and organoleptic qualities in pasteurized product and its cost price is reduce. Noted, that SHF heater, using in technology of SHF pasteurization, is guaranteed to provide uniform irradiation of all parts volume of pasteurized fluid.

Keywords: SHF heater, fluid, pasteurization.

The practical significance of the developed SHF heater [1,2] is estimated on the following two areas. In the process of pasteurization of liquid food products - milk, fruit and vegetable juices, wine, beer, and in the process of destruction of oil emulsions in the dehydration of oil on fields.

Currently using in the industry thermal methods of pasteurization of liquid food products are not effective. For the destruction of harmful microorganisms in the product, the product is heated to high temperatures - 85 ÷ 98 ^{0}C. This leads to a number of negative consequences: destruction of vitamins, enzymes, partial clotting proteins, caramelization of sugars, etc. In the developed SHF heater product is pasteurized at a low temperature of 45 ÷ 46 ^{0}C. This is due to the direct heating of the harmful microorganism of cells by SHF waves, which leads to cell death, and all harmful microorganisms at these higher temperatures. As a result, natural flavor and biologically valuable components are retained more fully in the product. Besides the energy costs is reduced for carrying out the process and, consequently, the price of the product is reduced. The resulting pasteurized product on the flavor, taste, color, biological value will differ little from the initial fresh product.

Preservation of valuable properties of the original fresh natural product during the process of pasteurization is an urgent task.

Food products are perishable. This is due to the fact that food products, especially liquid food products (milk, fruit and vegetable juices, wine, beer and others) is a good culture medium for many microorganisms, including pathogens that can cause infectious diseases.

Currently, the most common method of disposal of food products against harmful organisms is their heat treatment. French microbiologist Louis Pasteur is introduced this technology in the middle of the XIX century. Therefore, food decontamination process is called pasteurization.

The heat treatment (pasteurization) products is very important for the subsequent conservation of high quality products and for carrying out technological processes in biologically pure media. Depending on the type and properties of food raw material use different modes of pasteurization. There are long (at a temperature of 63-65 °C for 30-40 minutes), short (at a temperature of 85-90 ° C for 0.5-1 min) and flash pasteurization (at 98 ° C for a few seconds).

However, this method has a number of negative consequences. The negatives associated with high temperature pasteurization. High temperature is destroys vitamins, useful enzymes (such as, rennet), extractives, leads to partial clotting proteins, caramelization sugars, etc. Results of the study of high heating effects on water-soluble vitamins have shown that the most sensitive vitamin C. This is followed thiamine, riboflavin and niacin.

Now the food industry pay great attention to the development of methods aimed at the intensification of heat exchange processes [3]. One of such directions include the use of super higher frequency (SHF) of energy, allowing to carry out volume and contactless heating products at high speed. Using these effects, possible to intensify the many technological processes, to reduce the loss of raw materials, to increase product yield, improve their quality.

Applies the SHF electromagnetic fields is corresponds to the frequency range 10^8-10^{12} Hz, in which the effects on a substance due to the polarization of dielectrics, which include foods [4]. In accordance with the international agreement on the division of frequencies for SHF installations use two frequency ranges: 895 ÷ 915 MHz and 2350 ÷ 2450 MHz. The motion of electrons in such systems depends on values of dielectric permittivity of the medium and the dielectric loss coefficient.

The sterilizing effect of SHF processing on the foods is studied over 30 years. G.A. Cook noted [5] that the traditional heat processing of the heating by several orders volume of milk is exceeds the volume, in which microorganisms are located. The result is a significant overspending energy and the deterioration of the properties of milk. However, to this day, uniform theoretical justification action of SHF-energy to microorganisms is absent, and provided processing modes differ from each other. It is noted, that microwave treatment is causes significantly less change in the structure of the vitamins compared to traditional heating, since for obtaining bactericidal effect at the SHF-treatment heating is performed to a lower pasteurization temperature, than at using traditional heat sources [6]. In work [7] noted that modern technology for producing proteins of milk is at the stage of perfection. There is a search for new, more effective ways to implement the various processes of its processing, including heat. Thermolability of milk protein concentrates, as known, causes necessity of the reduction of thermal effects at their pasteurization. At the thermal effects, caused 99.0% inactivation

of microorganisms, there is a simultaneous destruction of heat-labile molecules. Research on heat treatment curd clot with using SHF-energy [8] showed the following results: reduced time of dehydration, decreased loss of dry matter and fat with serum. The authors explain this by the heating of the mixture and polarization effects, affecting on the structure of the bunch. There are a number of other papers on the application of SHF pasteurization [9,10]. However, these studies used only the effect a rapid and volumetric heating, and not taken into account the action of SHF waves on the harmful microorganism cells. Therefore, in these works at SHF pasteurization of the product, as in the conventional heat pasteurization, heated to a high temperature (85 ÷ 98 ^{0}C). Considering the low efficiency (50-70%) of the SHF heating, it has not found wide use in practice because of the high cost of energy and final high cost of the pasteurized product.

The high heating temperature during heat pasteurization is required mainly for overcoming the immune mechanism of defense of harmful microorganisms cells. Immune mechanism is prevents the penetration of heat into the cell, and thus keeps long life harmful microorganism. To overcome this immune defense, at pasteurization milk is heated forcedly to high temperature of 85 ÷ 98 ^{0}C. For example, a person, being in the sauna, can withstand temperatures to 100-120 ^{0}C, thanks to the mechanism of immune protection. However, if human cells to heat to t = 44 ^{0}C, the person dies. Therefore the creation of such a temperature in the cell of harmful microorganisms will lead to his death.

The main unit in technology of SHF pasteurization is a SHF heater of fluid. Heater design is shown in Figure 1. Device works as follows. To a heater through a branch pipe 2 liquid food product is supplied for its disinfection. It washes transparent waveguide and flows a continuous stream in the annular gap between the waveguide and the metal casing, is heated and exits through nozzle 3. The width of the annular gap is 0.6 ÷ 0.8 of the depth of penetration of electromagnetic waves into a liquid food product. The main component of any foodstuff liquid is water. At frequency SHF electromagnetic waves of 2450 MHz, their depth of penetration in water is 3 ÷ 3.5 cm. In SHF heater set gap width of 2.0 cm.

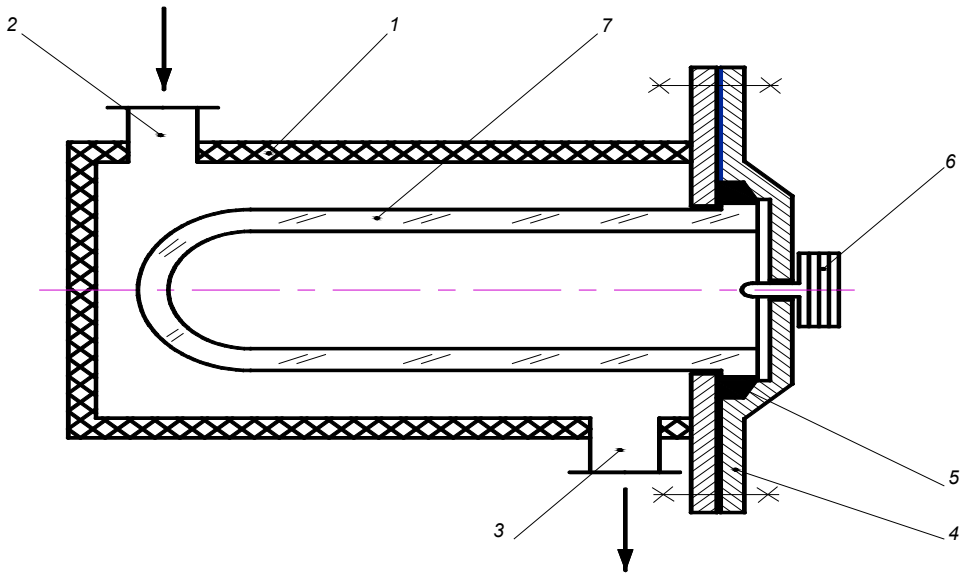

Figure 1. The SHF heater of liquid media

The heater consists of the following elements: a cylindrical metal casing – 1, covered by thermal insulation, with input nozzles – 2 and liquid outlet – 3; flange connection – 4; sealant – 5; magnetron – 6 (emits SHF electromagnetic waves with a frequency of 2450 MHz); a cylindrical transparent waveguide is made of glass – 7.

Magnetron 6 of heater is generates SHF electromagnetic wave. It is emitted from the antenna of the magnetron inside the cylindrical transparent waveguide 7. The dimensions of the waveguide: its diameter, length are selected such that can form a stable electromagnetic wave inside it. In developed heater butt of a waveguide has a spherical shape. This is because the glass waveguide is transparent to electromagnetic waves still has a low dielectric resistance. Therefore, part of the wave energy will reflected inside the waveguide. In this regard, if butt of the waveguide will flat and vertical, then the reflected portion of the energy from the flat butt, would return to the magnetron, causing its undesirable overheating. The spherical shape of the butt of a waveguide dissipate the reflected energy to the waveguide wall. The spherical shape of the butt of a waveguide is to disperse the reflected energy to the wall of the waveguide. This prevents overheating of the magnetron. Electromagnetic SHF wave passing through the wall of the glass waveguide, translucent liquid food and harmful microorganisms in it. The SHF energy causes intensive vibrations of the water dipole molecules, ions, salts, acids in the product and inside the cells of harmful microorganisms. In the result of the friction of dipole molecules and ions each other, food and protein inside the cells of harmful microorganisms are heated. Part of the wave energy that is not absorbed by the product, reflected from the steel cylindrical housing wall and again gets into the product, where the energy is

absorbed completely. The rate of heating product are determine the magnetron power and product expenditure through the heater. The heating temperature of the product is controlled by its residence time in the heater under SHF radiation.

It noted that forced high heat during heat pasteurization is the reason for the negative consequences mentioned above. In this paper, taken into account the heating effect of SHF electromagnetic waves themselves cells inside.

Consider the most common liquid food - milk. According to the Agency of the Republic of Kazakhstan on statistics in the field of food processing industry in 2014 Kazakhstan produced 5 million tonnes of milk (40% of processed milk), 2013 – 4.89 million tonnes of milk (41%), 2012 – 4.8 million tonnes of milk (35%).

It is known that milk and cells of harmful microorganisms present in the milk, consist of 80% water and dissolved salts, acids. Dipolar molecules of water, the acid and salts are disintegrate into ions in water. At irradiated milk by SHF electromagnetic waves, dipole molecules of water begin to rotate intensively, and salt ions, acids are fluctuate. The friction between the molecules and ions leads to rapid heating of the whole volume of milk. In this case, the milk and cells harmful microorganisms are heated (the environment in which harmful microorganisms are located). Since the cells of living organisms have not an immune defense mechanism from SHF radiation, it easily penetrates into the cell. Acting on the dipole water molecules and ions of salts, acids in the cell, the SHF is heated their inside. Inside the cell, when the temperature reached is above 40 ^{0}C, in it begins the process of coagulation of protein structures, and the cell dies. Dies harmful microorganisms. Therefore, at the SHF pasteurization, product is enough to heat to 45 ÷ 46 ^{0}C.

Thus, in developed SHF heater the proposed method of pasteurization of liquid food products is used direct heating effect of the harmful microorganism cells. This includes the development of scientific innovation. For cell death, as noted above, it is sufficient to heat to a temperature coagulation of the protein in it, i.e. to 42 ÷ 44 ^{0}C. It is very important that the electromagnetic waves are irradiated the whole volume of the liquid food product. Not irradiated parts volume in the product should not be. It reliably provides a developed SHF heater of monomode type. With the same effects a developed SHF heater to use prospectively at the pasteurization of fruit and vegetable juices, beer, wine. Especially significant effect of SHF pasteurization will appear at the pasteurization of juices, as the SHF pasteurized juice by taste, aroma, color, and usefulness will differ little from fresh natural juices.

Reference

1 Kaziev M., et al. SHF heater of fluid. Patent of the RK #25990 (15/08/2012). Bull. #8.

2 Kaziev M., Orymbetova G., Sadyrbaeva A. Superhigh frequency heater of aliquid for the industrial area application // Industrial technology and engineering. – 2015. – №2(15) – P. 56 – 63.

3 Rogov I.A. Non-traditional technology //Food industry.- 1993. - № 1. - P.12 - 15.

4 E.Okressa. SHF energy. Application of SHF energy in the industry. 1970. - V.2. - 272 p.

5 Cook G.A. Processes and devices of the dairy industry. - M ., 1955. - 427 p.

6 Okmen Zinet Aytanga, Bayindirli A. Levent. Effect of microwave processing on water soluble vitamins. Kinetic parameters. // Int.J. Food Prop. – 1999 - № 3 – P. 255-264.

7 Kuchma T.M., Samoylenko I.I. Modification of the microflora life of raw milk with the SHF pasteurization // Electronic processing of materials. - 1990. - №5. - P. 71 - 80.

8 Orlov V.V., Berezko V.A. and others. The use of SHF energy in the process preparation of curd clot //Theoretical and experimental studies of intensification of processes, machines and aggregates of food technologies. St. Petersburg, 1996. - P. 34-35.

9 Dyachenko P.F. et al. Technology of milk and dairy products -. M . 1974. - 447 p.

10 Shobinger W. Fruit and vegetable juices: the scientific bases and technologies. 2000. - 640 p.